ClearSign
Better Solutions

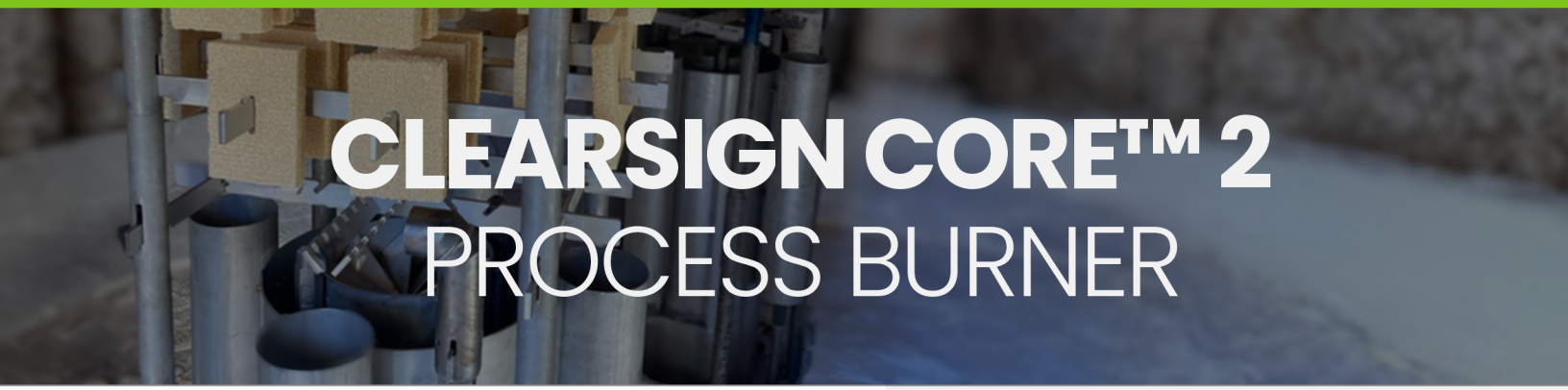

# CLEARSIGN CORE™ 2
# PROCESS BURNER

## KEY ADVANTAGES

Achieve SCR-level $NO_x$ emissions at a fraction of the cost and complexity. Address persistent operating challenges, including flame impingement on heater tubes and burner tip fouling or plugging. Carefully engineered internal flue gas recirculation reduces $NO_x$ without requiring a recirculation fan or forced draft, while supporting operation on natural gas, hydrogen, and blended fuels.

| Performance | ClearSign | SCR |
|---|---|---|
| $NO_x$ | < 5 ppm | < 5 ppm |
| Heat Release | 2-16 MMBtu/h | N/A |
| CO | < 50 ppm | N/A |
| Operating Costs | Low | High |
| Installation Period | < 1 Week | > 6 Weeks |
| Catalyst/Chemicals | None | Significant |

## FEATURES

- Ultra-low $NO_x$
- No FGR or Chemicals
- Compact Flame
- Retrofittable
- Turndown 10:1

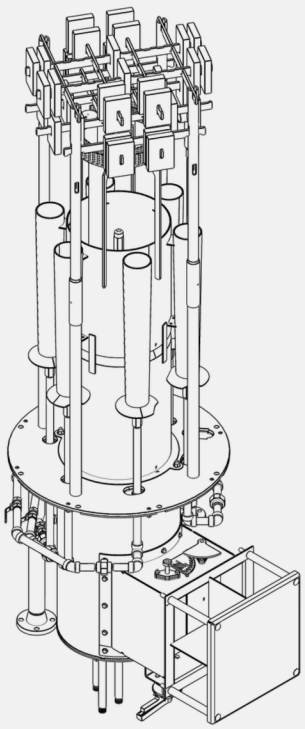


CONTACT US

+1.918.935.5779
sales@clearsign.com
www.clearsign.com
8023 E 63rd Pl. Ste. 101
Tulsa, OK 74133 USA

ClearSign
Better Solutions

# STANDARD SIZES

## BURNER CAPACITY (MMBtu/h) vs. AVAILABLE DRAFT*

| Burner Size \ Draft (in. $H_2O$) | 0.2 | 0.3 | 0.4 | 0.5 | 0.6 | 0.7 | 0.8 |
|---|---|---|---|---|---|---|---|
| 2 | 1.6 | 2.0 | 2.3 | 2.5 | 2.8 | 3.0 | 3.2 |
| 4 | 3.2 | 4.0 | 4.6 | 5.1 | 5.6 | 6.1 | 6.5 |
| 6 | 4.9 | 6.0 | 6.9 | 7.7 | 8.4 | 9.1 | 9.8 |
| 8 | 6.5 | 8.0 | 9.2 | 10.3 | 11.3 | 12.2 | 13.0 |
| 10 | 8.1 | 10.0 | 11.5 | 12.9 | 14.1 | 15.2 | 16.3 |
| 12 | 9.8 | 12.0 | 13.8 | 15.4 | 16.9 | 18.3 | 19.6 |
| 14 | 11.4 | 14.0 | 16.1 | 18.0 | 19.8 | 21.3 | 22.8 |
| 16 | 13.0 | 16.0 | 18.4 | 20.6 | 22.6 | 24.4 | 26.1 |

**BASED ON STANDARD CONDITIONS: 14.7psia | 60°F | 15% Excess Air*

# ABOUT US

ClearSign Technologies provides solutions to some of the world's most pressing productivity, energy efficiency and pollution problems affecting the energy, oil and gas production, boiler and processing industries. ClearSign's core offerings include ultra-low $NO_x$ burners, natural and forced draft burners, flaring technologies, and flame sensing solutions used across industries such as refining, midstream, gas processing, petrochemicals, chemicals, power generation, and industrial boilers.

## HEATER CUTOUT DIMENSIONS

| Burner Size (MMBtu/h) | Cutout (in.) |
|---|---|
| 2 | 20.75 |
| 4 | 24.00 |
| 8 | 27.00 |
| 12 | 36.00 |
| 16 | 39.00 |

SCR Alternative: < 5 ppm $NO_x$

No FGR or Chemicals

Retrofittable into existing cutouts


CONTACT US

+1.918.935.5779
+1.918.500.7312
sales@clearsign.com
www.clearsign.com
8023 E 63rd Pl. Ste. 101
Tulsa, OK 74133 USA